- Dual-band access point
- Support for 802.11ax
- Radio interface with MU-MIMO 2×2
- 2 × 1GE and 2 × SFP (1G) ports
- PoE+ (IEEE 802.3at-2009) and 12–56 V DC power supply
- Seamless roaming
- Up-to-date authentication and encryption means

## Industrial access point

WOP-30LI is a next-generation industrial access point of Wi-Fi 6 (IEEE 802.11ax) that provides a high-speed and secure wireless network. Due to built-in 2 × 1GE and 2 × SFP (1G) ports, WOP-30LI allows connecting other devices and cascading multiple access points into one network.
The durable, sealed WOP-30LI housing with IP67 protection rating is ideal for installing the device in extreme industrial facilities and open areas (factories, quarries, production buildings, large industrial complexes, warehouses, etc.)

## Scalability

The WOP-30LI wireless access point is an up-to-date flexible solution that allows changing the network coverage area in order to increase the quantity of serviced mobile devices. Due to a high-performance hardware platform, scalability and intuitive interface, it is possible to deploy a wireless IT infrastructure easily and quickly.

## Wireless connection

Due to support for IEEE 802.11ax standard the WOP-30LI access point provides up to 574 Mbps (2.4 GHz) and up to 1201 Mbps (5 GHz) data rates. Using the MU-MIMO technology and omnidirectional antennas makes WOP-30LI a universal solution for organizing public networks.

## Security

To ensure a secure connection, the modern WPA3 authentication and encryption technologies are supported. The new generation access points meet the highest security and compatibility requirements for earlier versions of the 802.11 standard.

## Performance

The high-performance processors are used in the devices in order to provide reliability and high data processing rates.

## Power supply

WOP-30LI supports power supply variability, so the access point is powered either through a DC connector from a DC power supply or via an Ethernet cable (PoE). The ability to choose a power source expands the application possibilities of the device.

### Application diagram

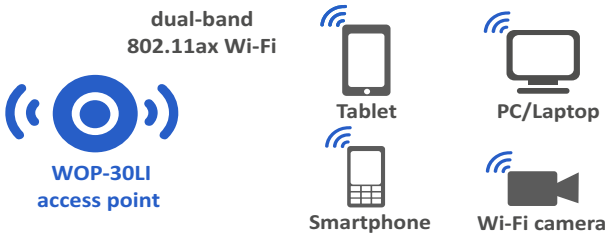


### Interface configuration

| Ethernet | SFP | Wi-Fi | N type connectors for antennas |
|---|---|---|---|
| 2×1G | 2×1G | 802.11a/b/g/n/ac/ax | 4 |

## Features and capabilities

### Interfaces
– 2 × 10/100/1000BASE-T ports (RJ-45), one of the ports with PoE support
– 1 × 100/1000BASE-X port (SFP)
– 1 × 1000BASE-X port (SFP)
– Wi-Fi 2.4 GHz IEEE 802.11b/g/n/ax
– Wi-Fi 5 GHz IEEE 802.11a/n/ac/ax
– 4 × N type connectors (female) for external antennas (Omni, sector, panel and etc.)

### WLAN capabilities
– Support for IEEE 802.11a/b/g/n/ac/ax
– Support for IEEE 802.11r/k/v roaming
– Data aggregation, including A-MPDU (Tx/Rx) and A-MSDU (Rx)
– WMM-based packet priorities and planning
– Dynamic frequency selection (DFS)
– Support for hidden SSID
– 14 virtual access points
– Third-party access points detection
– Spectrum analyzer
– WDS
– MESH
– Auto channel selection
– APSD
– Support for client mode (STA)
– BSS coloring
– EIRP power control

### Network features
– Automatic speed negotiation, duplex mode negotiation and MDI-MDI-X switch-over
– VLAN
– C-VLAN
– Management VLAN
– DHCP client
– GRE
– Local switching
– ACL
– NTP
– Syslog
– IPv6
– LLDP

### QoS functions
– Bandwidth limiting
– Configuring WMM (EDCA) parameters for radio interfaces
– 802.1p and DSCP priority

### Configuration
– Remote management via Telnet, SSH
– CLI
– NETCONF
– Web interface
– SNMP

### Security
– Centralized authorization via RADIUS server (802.1X WPA/WPA2/WPA3 Enterprise)
– WPA/WPA2/WPA3/OWE encryption
– Captive Portal
– Authorization via RADIUS server when logging into the device
– Support for WIDS/WIPS[1]

### Wireless interface specifications
– Frequency range: 2400–2483.5 MHz; 5150–5350 MHz, 5470–5850 MHz
– BPSK, QPSK, 16QAM, 64QAM, 256QAM, 1024QAM modulations
– Support for MU-MIMO 2×2
– Support for OFDMA
– Bandwidth: 20, 40 MHz for 2.4 GHz;
20, 40 and 80 MHz for 5 GHz

Operating channels[2]
– 802.11b/g/n/ax: 1–13 (2401–2483 MHz)
– 802.11a/n/ac/ax: 36–64 (5170–5330 MHz)
100–144 (5490–5730 MHz)
149–165 (5735–5835 MHz)

Data rate[3]
– 2.4 GHz, 802.11ax: 574 Mbps
– 5 GHz, 802.11ax: 1201 Mbps

Maximum power of the transmitter[2]
– 2.4 GHz: 20 dBm
– 5 GHz: 20 dBm

Receiver sensitivity
– 2.4 GHz: up to -93 dBm
– 5 GHz: up to -94 dBm

Clients
– Maximum number of concurrent connections:
  – 2.4 GHz: 120
  – 5 GHz: 120

### Physical specifications
– Power consumption: no more than 18 W
– 128 MB SPI-NAND Flash
– 256 MB DDR3 RAM
– Power supply:
  – PoE+ 48 V/56 V (IEEE 802.3at-2009)
  – DC 12–56 V
– Operating temperature: from -45 to +65 °C
– Ingress protection: IP67
– Pole/wall mount
– VESA size: 100 × 100
– Dimensions (W × H × D): 308 × 253 × 91 mm
308 × 367 × 91 mm (with cable gland)
– Weight: 3.2 kg

[1] Support for WIDS/WIPS functionality is provided under license.
[2] The number of channels and the value of the maximum output power will vary according to the rules of radio frequency regulation in your country.
[3] The maximum wireless data rate is defined according to IEEE 802.11 standards. The real bandwidth can be different. Conditions of the network, environment, the amount of traffic, building materials and constructions and network service data can decrease the real bandwidth. The environment can influence the network coverage range.

## Use cases

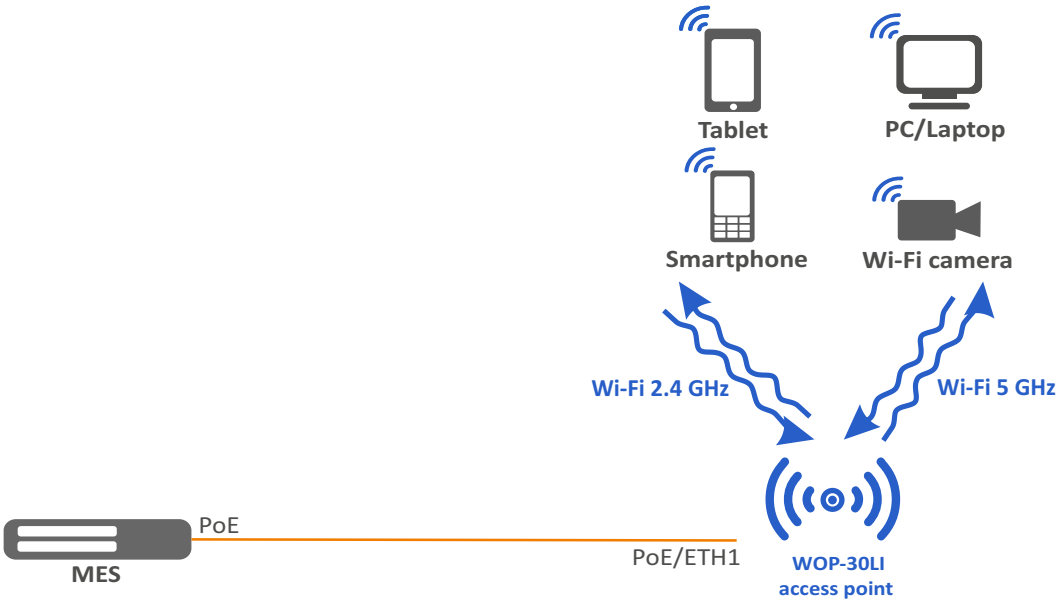


Use case of WOP-30LI with PoE port

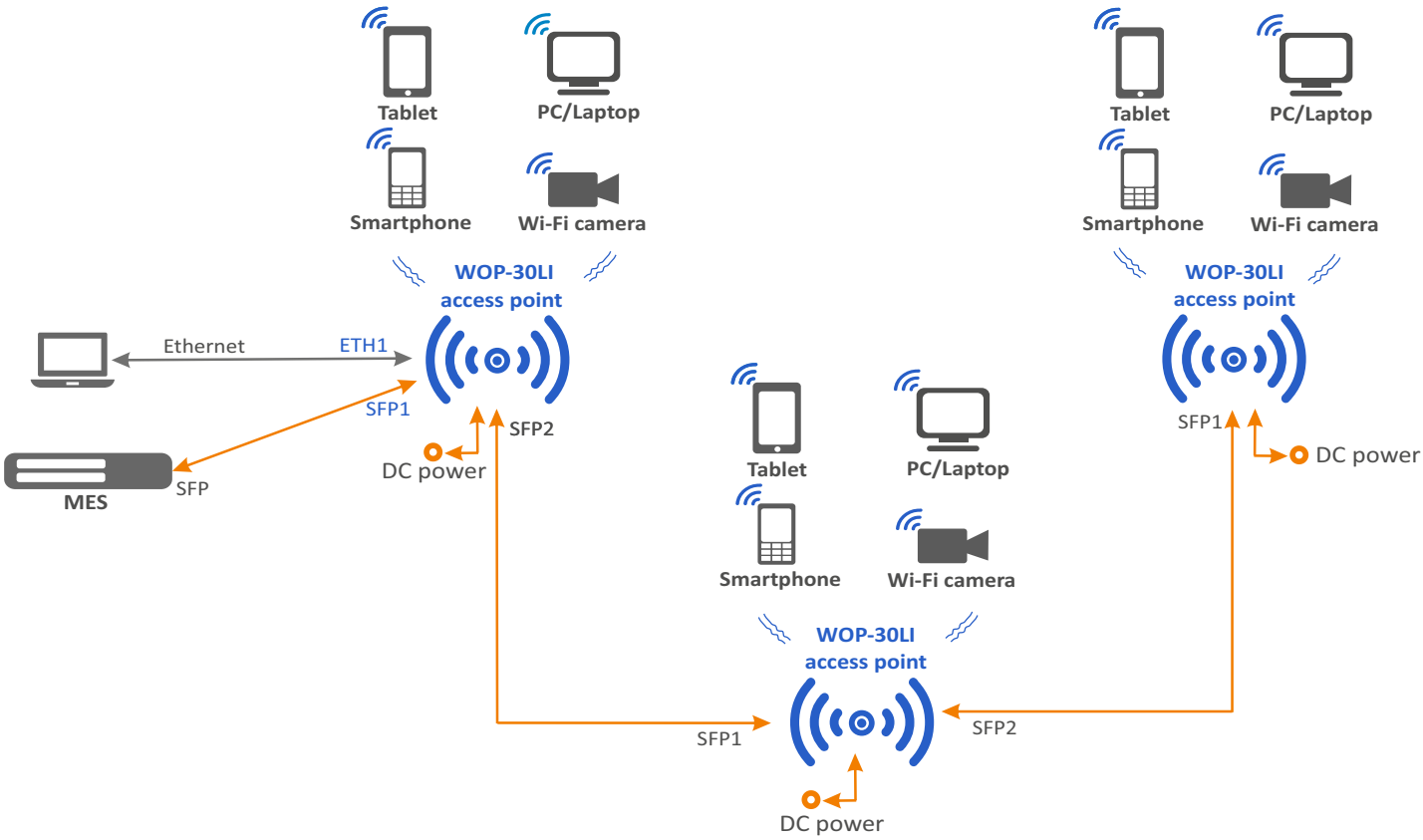


Use case of WOP-30LI with DC power and SFP ports

## Use cases (continued)

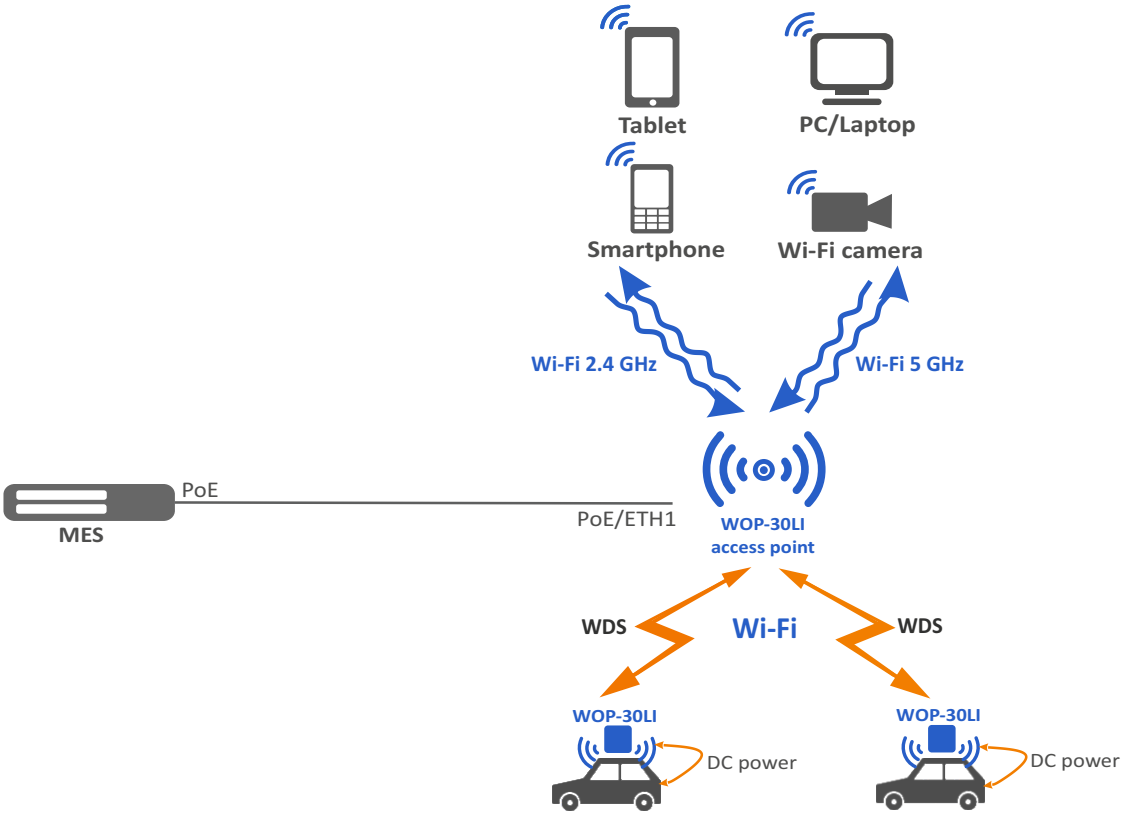


Use case of WOP-30LI with DC power and WDS

## Ordering information

| Name | Description |
|---|---|
| **WOP-30LI** | WOP-30LI access point. Cable glands and mounting kit. |

### Related products

Omnidirectional antenna: Omni LYNwave (2.4 GHz); 5 dBi, 1 × N-type;
Omni LYNwave (5 Ghz); 5.5 dBi, 1 × N-type.

Sector antenna: 2.4 GHz dual-polarized antenna;
5 Ghz dual-polarized antenna.

Power injector Passive PoE 56 V.

### Related software

| | |
|---|---|
| WLC hardware controller | WLC-15;<br>WLC-30;<br>WLC-3200. |
| vWLC virtual controller | vWLC-AP option for connecting one access point to a vWLC controller.<br>vWLC-AP-R option for connecting one access point to a redundant vWLC controller. |
| SoftWLC software controller | SoftWLC option. Software controller with integrated AAA solution and authorization portal for one Eltex access point.<br>Airtune option for one Eltex access point.<br>WIDS/WIPS-SW option for one Eltex access point. Wireless network intrusion detection and prevention service. |

**Contact us**

+7 (383) 274 10 01
+7 (383) 274 48 48

eltex@eltex.ru

eltex-co.com

**About Eltex**

Eltex Enterprise is a leading Russian developer and manufacturer of communication equipment with 30 years of history. Complete solutions and their seamless integrability into the Customer's infrastructure are the priority growth areas of the company.